USB PD-Input

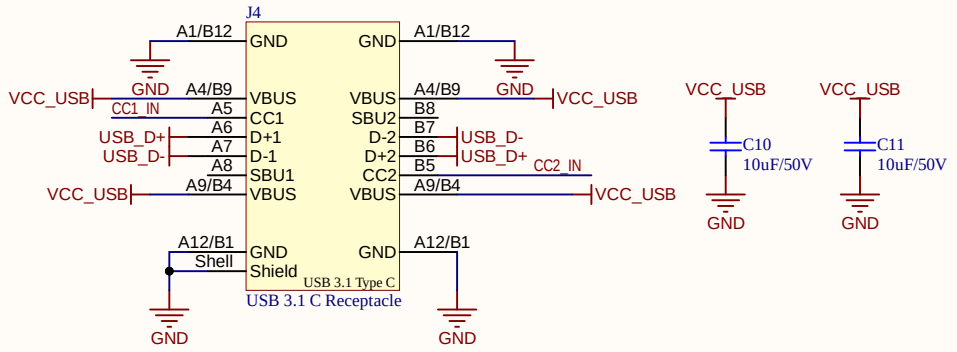

Fallback 5.1kR CC-Pulldowns

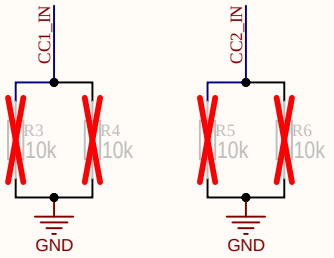

3V3 Stepdown (only used internally + 3V3 Pin)

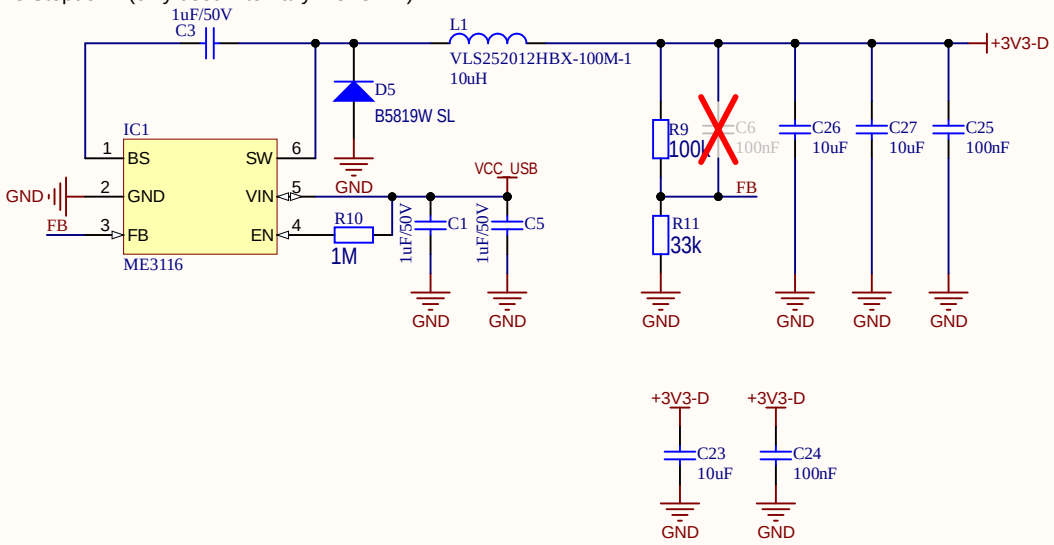

Voltage Output Switch

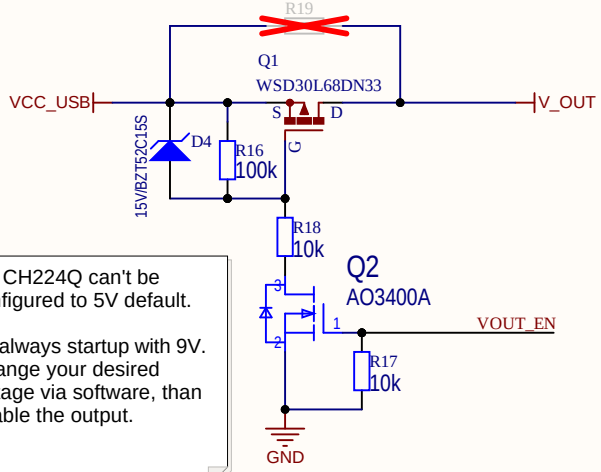

the CH224Q can't be configured to 5V default.

It'll always startup with 9V. Change your desired voltage via software, than enable the output.

Last Modification: 18.03.2026	@4R3Ngineering
Document: Power.SchDoc	
Project: MiniESP32.PrjPcb	
Variant: V2.2 PD	

ESP32 Programming

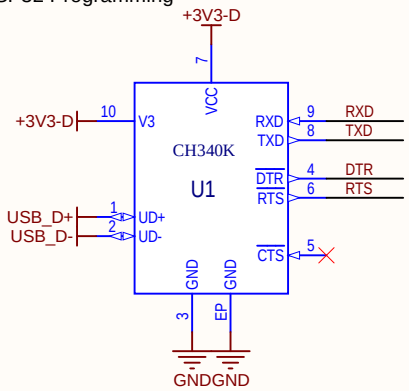

Auto-Programming

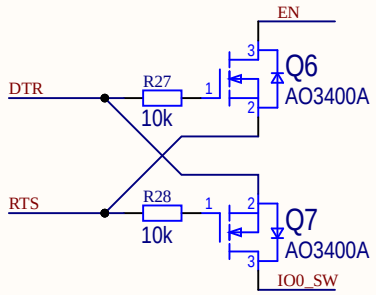

Peripherals

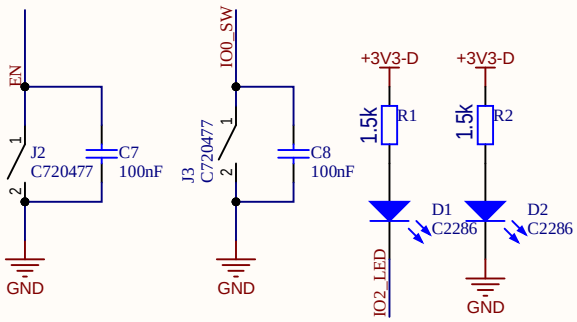

MCU

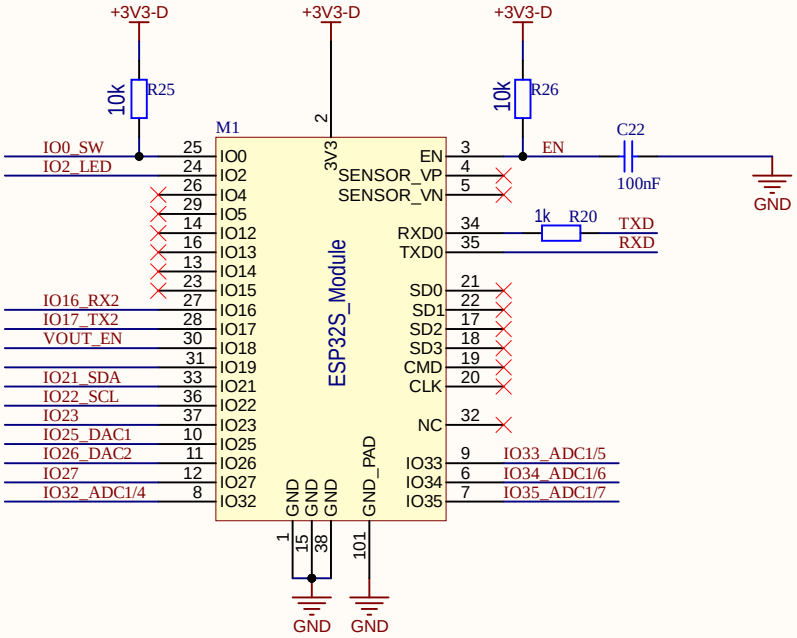

USP-PD Sink-Controller

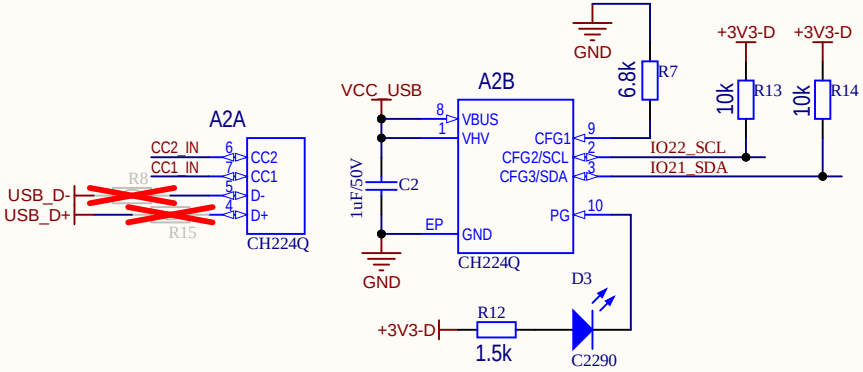

Default Mode from the CH224Q is ALWAYS at least 9V! you can't control th e Chip via I2C and have 5V default (I asked)
Change R7 for some other "not 5V" default Voltage.

Last Modification: 18.03.2026	@4R3Ngineering
Document: ESP32.SchDoc	
Project: MiniESP32.PrjPcb	
Variant: V2.2 PD	